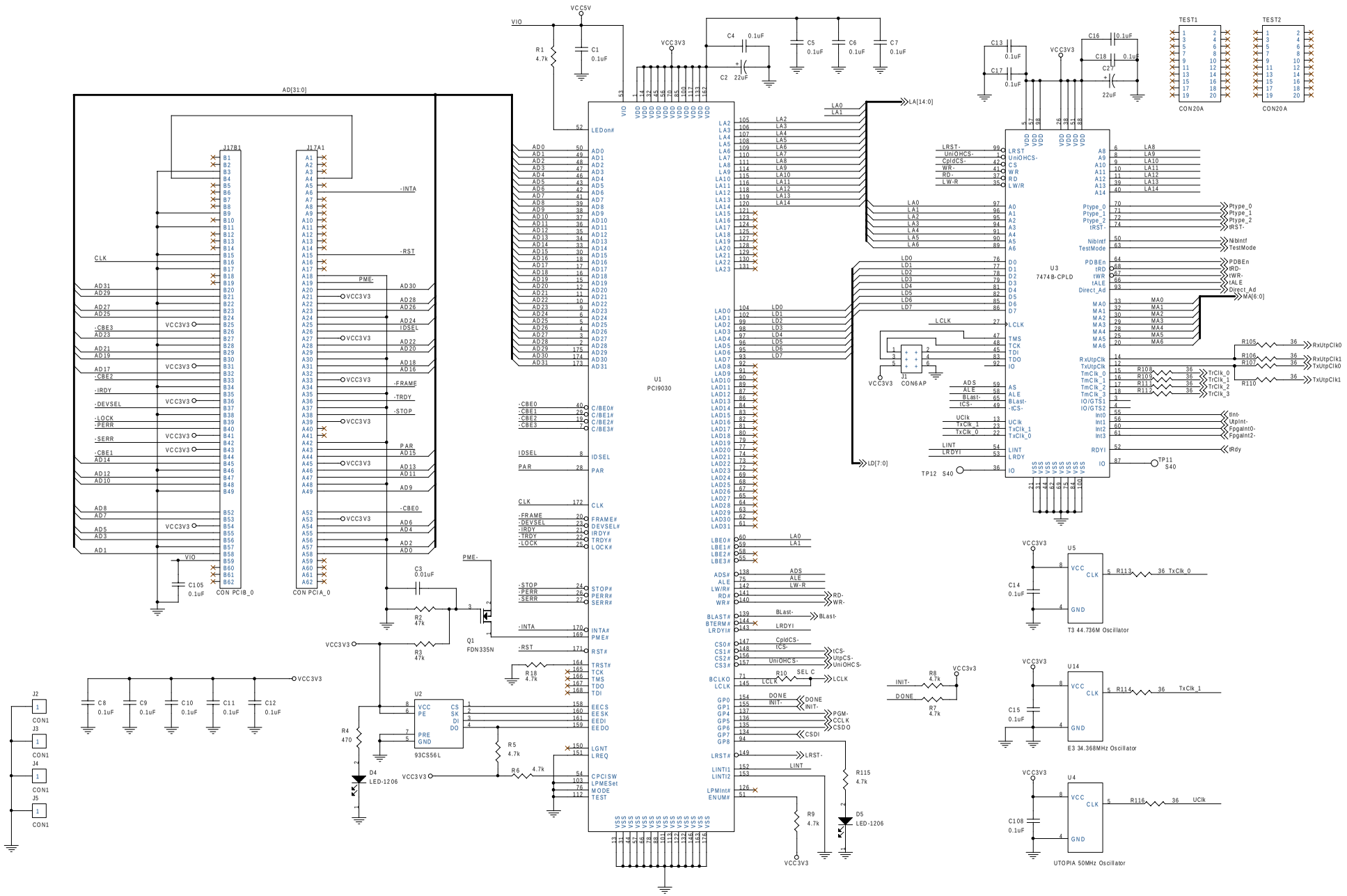
VCC5V
VIO
R1 4.7k
C1 0.1uF
VCC3V3
C4 0.1uF
C2 22uF
C5 0.1uF
C6 0.1uF
C7 0.1uF
C13 0.1uF
C17 0.1uF
C16 0.1uF
C18 0.1uF
C27 22uF
TEST1
CON20A
TEST2
CON20A
AD[31:0]
J17B1
J17A1
CON PCIB_0
CON PCIA_0
C105 0.1uF
-INTA
-RST
CLK
PME-
-FRAME
-TRDY
-STOP
-PERR
-SERR
-CBE0
-CBE1
-CBE2
-CBE3
-IRDY
-DEVSEL
-LOCK
IDSEL
PAR
C3 0.01uF
R2 47k
R3 47k
Q1 FDN335N
R18 4.7k
U1
PCI9030
LEDon#
LA[14:0]
LD[7:0]
U3
7474B-CPLD
J1
CON6AP
TP12 S40
TP11 S40
RxUtpClk0
RxUtpClk1
TxUtpClk0
TxUtpClk1
TrClk_0
TrClk_1
TrClk_2
TrClk_3
IRdy
U5
T3 44.736M Oscillator
U14
E3 34.368MHz Oscillator
U4
UTOPIA 50MHz Oscillator
TxClk_0
TxClk_1
UClk
R113 36
R114 36
R116 36
C14 0.1uF
C15 0.1uF
C108 0.1uF
R8 4.7k
R7 4.7k
INIT-
DONE
R10
SEL C
LCLK
CSDI
LRST-
LINT
R115 4.7k
R9 4.7k
D5 LED-1206
C8 0.1uF
C9 0.1uF
C10 0.1uF
C11 0.1uF
C12 0.1uF
J2
J3
J4
J5
CON1
U2
93CS56L
R4 470
D4 LED-1206
R5 4.7k
R6 4.7k
EECS
EESK
EEDI
EEDO
LGNT
LREQ
CPCISW
LPMESet
MODE
TEST
Title
XRT74L74 EVAL - PCI Interface
Size C
Document Number <Doc>
Rev B
Date: Thursday, January 22, 2004
Sheet 1 of 4

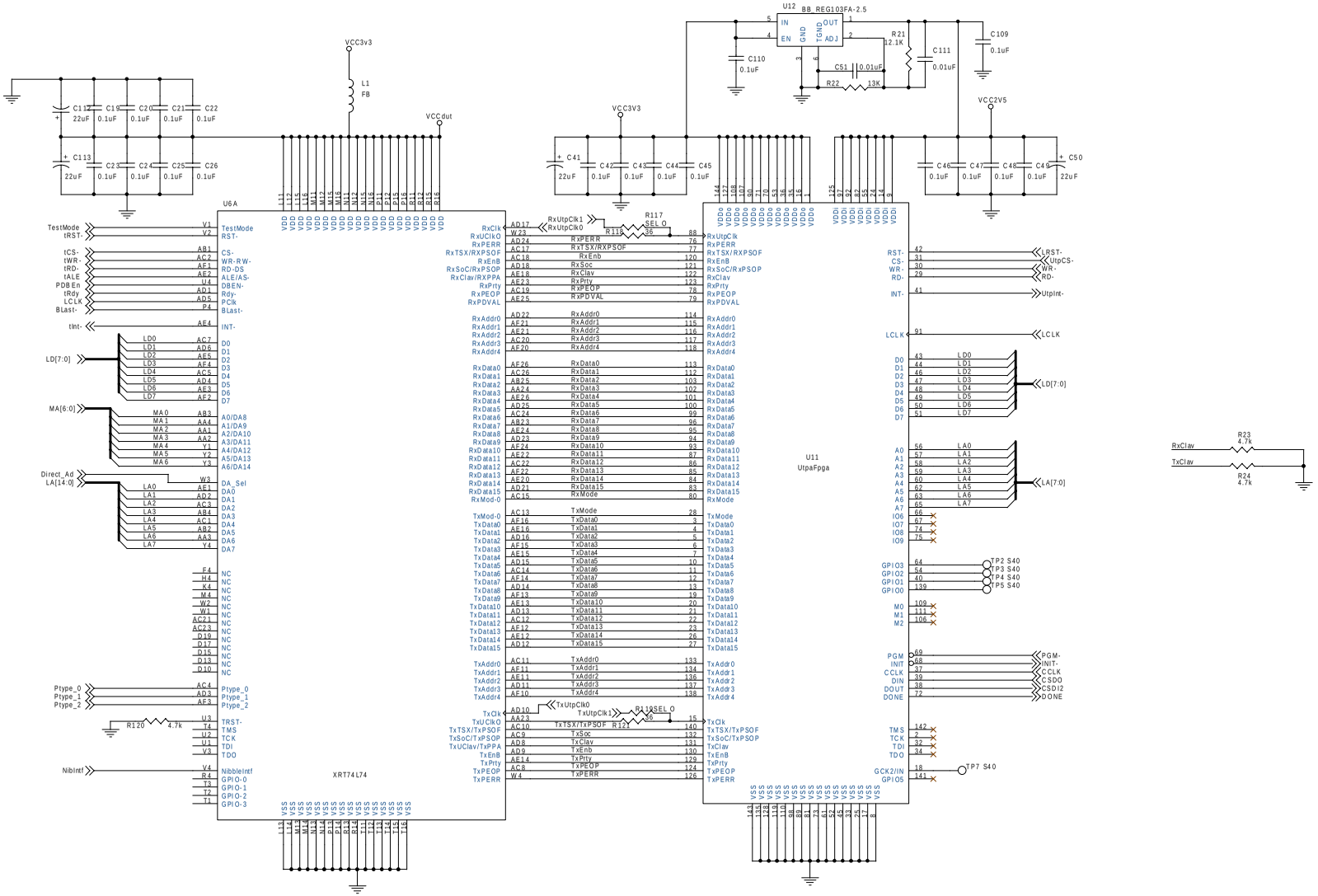

Title	XRT74L74 - Utopia Interface		
Size C	Document Number <Doc>		Rev B
Date: Thursday, January 22, 2004	Sheet 2 of 4		

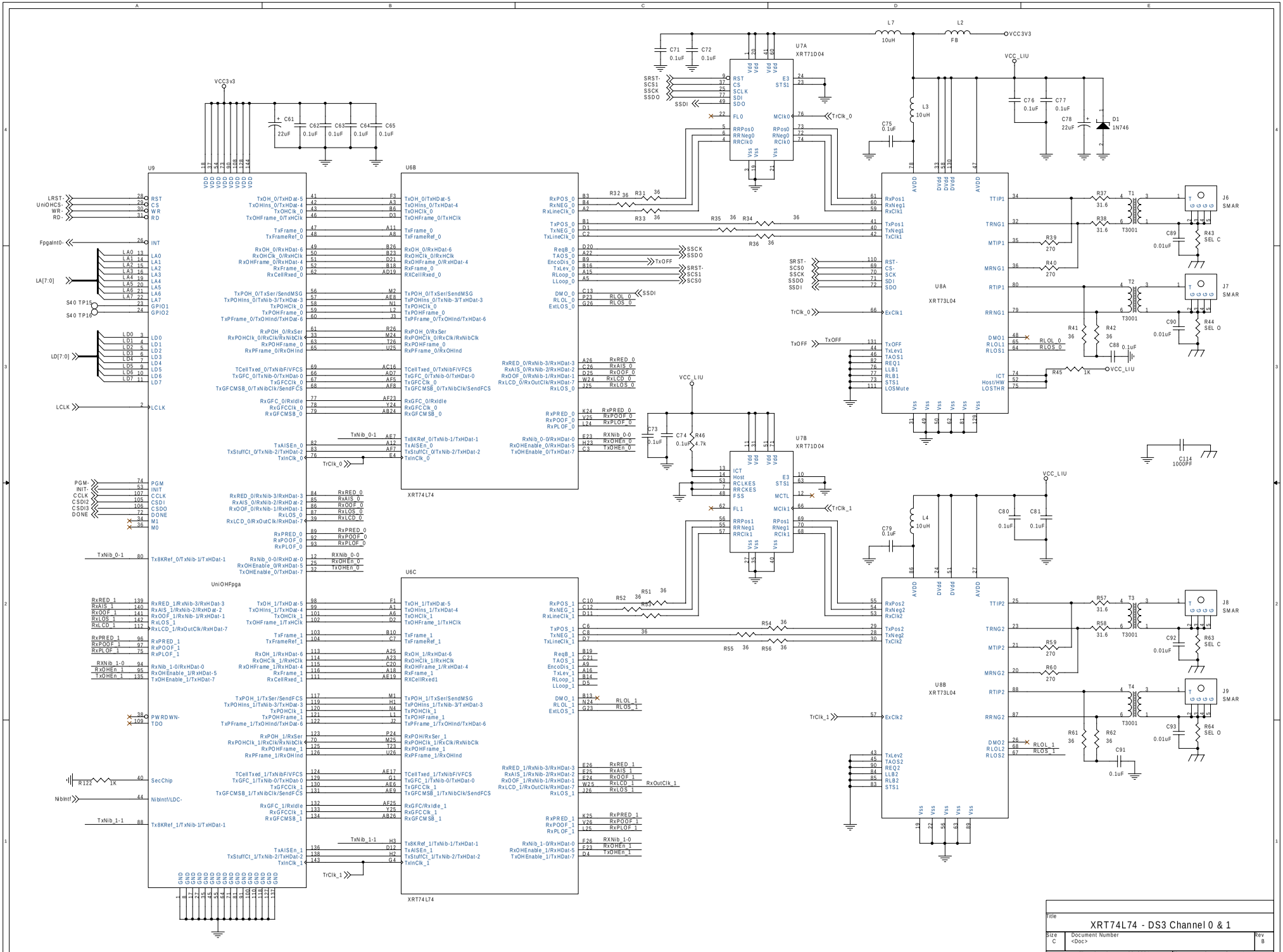

Title	XRT74L74 - DS3 Channel 0 & 1	
Size C	Document Number <Doc>	Rev B
Date: Thursday, January 22, 2004	Sheet 3 of 4	

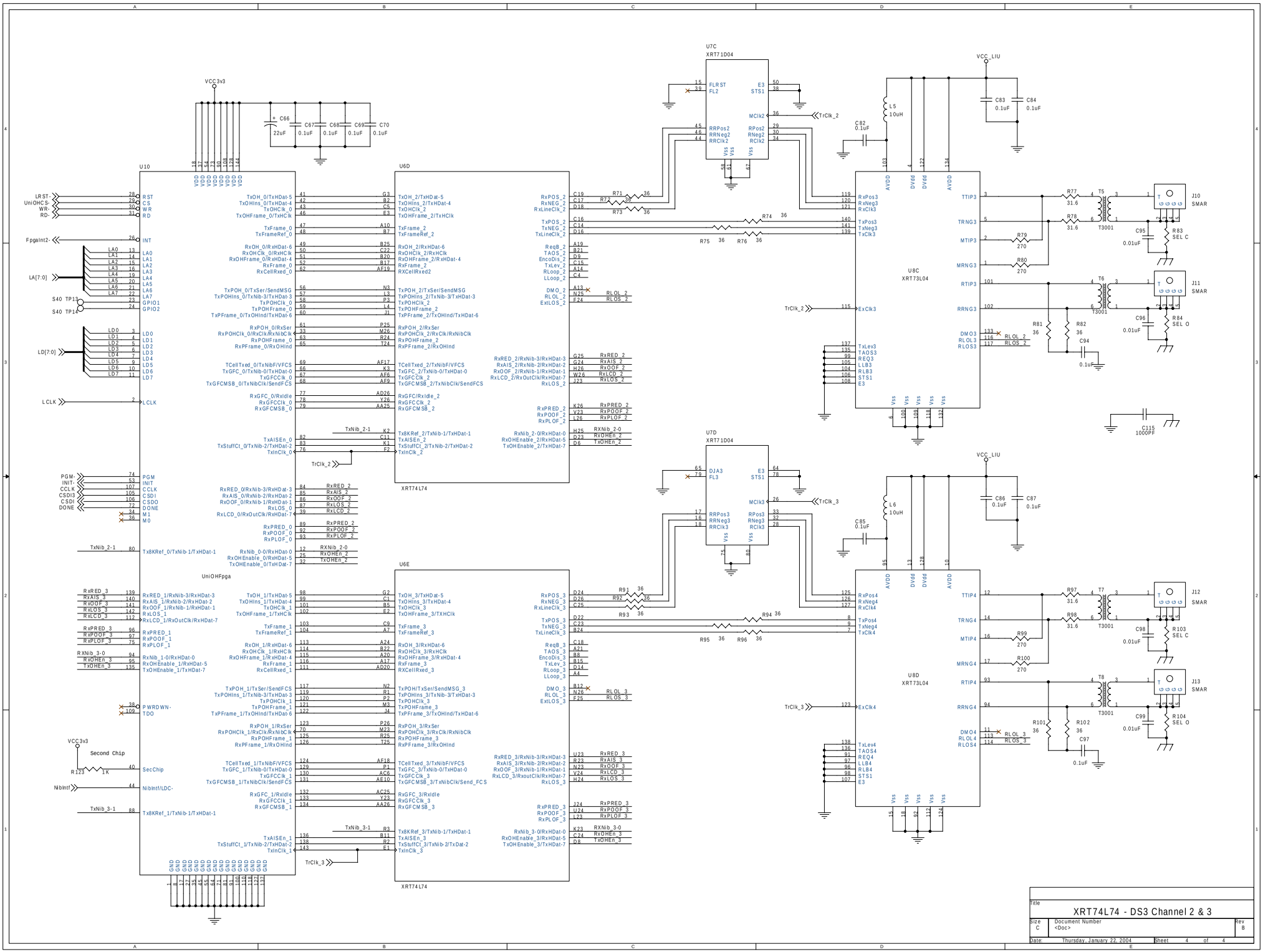
U10
U6D
U6E
U7C
XRT71D04
U7D
XRT71D04
U8C
XRT73L04
U8D
XRT73L04
XRT74L74
XRT74L74
VCC3v3
VCC_LIU
UniOHFpga
Second Chip
J10 SMAR
J11 SMAR
J12 SMAR
J13 SMAR
T3001
SEL C
SEL O
XRT74L74 - DS3 Channel 2 & 3
Title
Size C
Document Number <Doc>
Rev B
Date: Thursday, January 22, 2004
Sheet 4 of 4